FABRICATION ISSUE

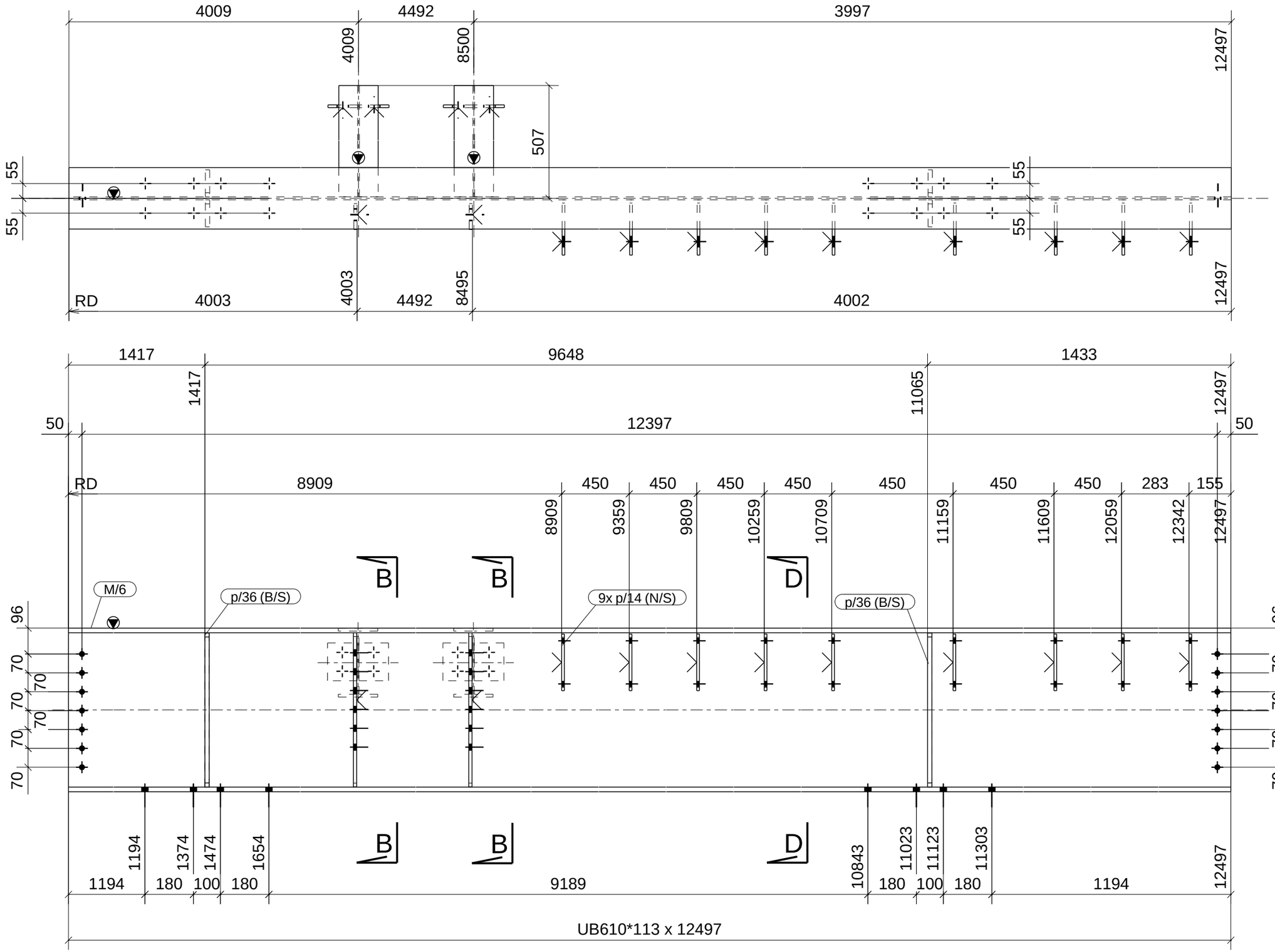

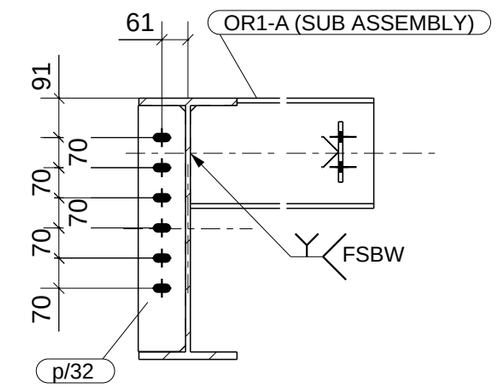

B - B

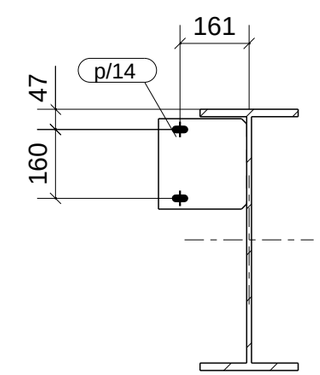

D - D

MATERIAL LIST						
ITEM	No.OFF	SECTION	GRADE	LENGTH	WEIGHT(kg)	AREA(m^2)
M/6	1	UB610*113	300PLUS	12497	1422.5	26.0

1 BEAM[S] REQ'D AS DRAWN MK B1-A

REV	DATE	DESCRIPTION